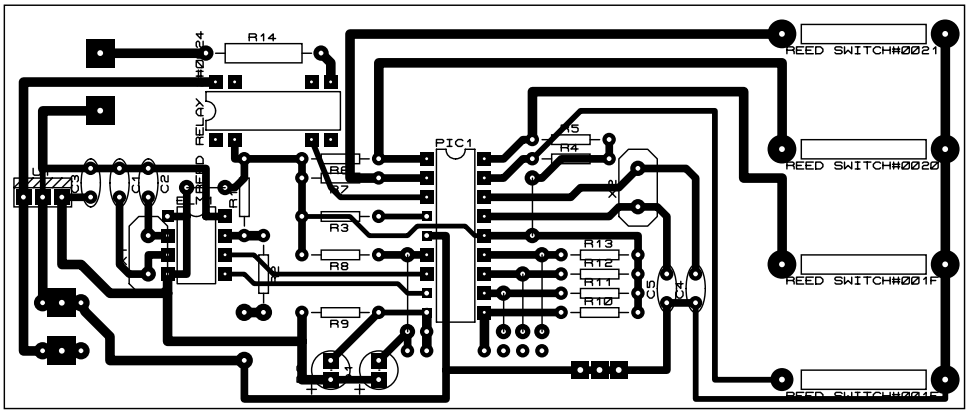
R14
RELAY
PIC1
R5
R4
R13
R12
R11
R10
R3
R8
R9
C1
C2
C3
C4
C5
X2
REED SWITCH#0021
REED SWITCH#0020
REED SWITCH#001F

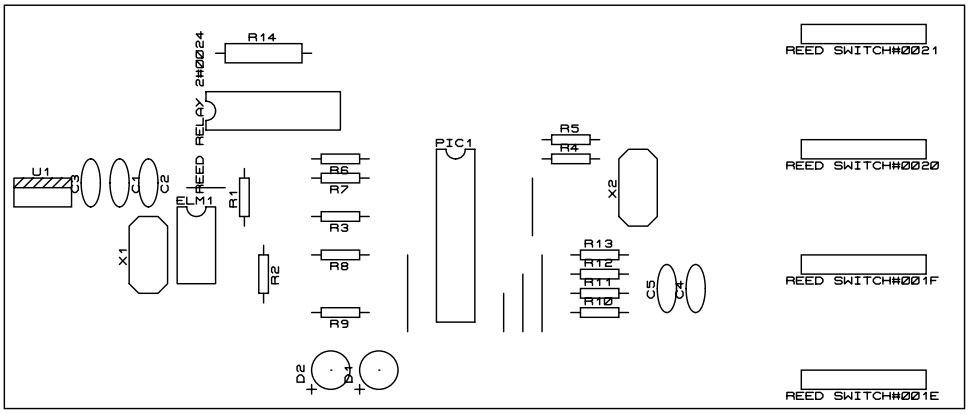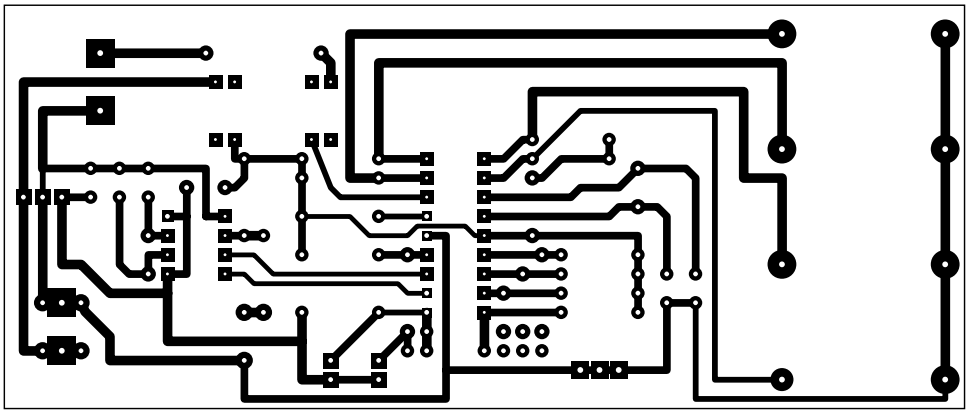
R14
REED RELAY 24V0024
U1
C3
C1
C2
M1
K1
R1
X1
R2
R6
R7
R3
R8
R9
PIC1
R5
R4
X2
R13
R12
R11
R10
C5
C4
D2
D1
REED SWITCH#0021
REED SWITCH#0020
REED SWITCH#001F
REED SWITCH#001E